XGE..R..ZWD - Gerader Einschraubstutzen

Zöll. Einschraubzapfen mit WD (ISO 1179) / 24°-Anschluss

XGE..R..ZWD - Straight male stud connector

thread: BSP parallel with captive seal (ISO 1179) / 24° cone end

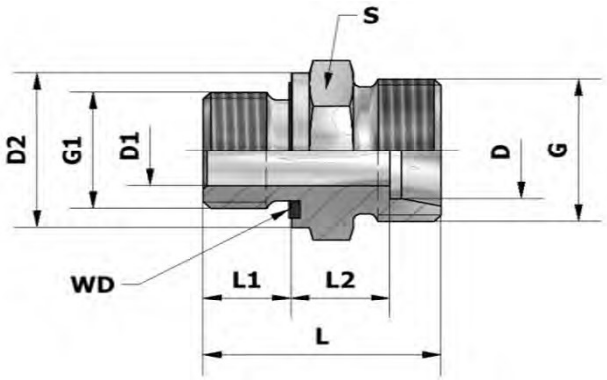

Reihe series	D	G	G1	D1	D2	L	L1	L2	S	Gewicht weight kg/100	Sach-Nr. comp.no.	Artikel-Nr. part.no.
S	6	M14x1,5	G ¼ A	4	19	32,0	12	13,0	19	3,50	**1071/21**	**XGE6R1/4ZSWDPc3d**
PN 630	6	M14x1,5	G ⅜ A	4	22	34,5	12	15,5	22	5,20	**19035/21**	**XGE6R3/8ZSWDPc3d**
PN 800	8	M16x1,5	G ¼ A	5	19	34,0	12	15,0	19	4,10	**1072/21**	**XGE8R1/4ZSWDPc3d**
	8	M16x1,5	G ⅜ A	5	22	34,5	12	15,5	22	5,70	**14245/21**	**XGE8R3/8ZSWDPc3d**
PN 630	8	M16x1,5	G ½ A	5	27	39,0	14	18,0	27	8,90	**19036/21**	**XGE8R1/2ZSWDPc3d**
PN 800	10	M18x1,5	G ¼ A	5	19	34,0	12	14,5	19	4,20	**9717/21**	**XGE10R1/4ZSWDPc3d**
	10	M18x1,5	G ⅜ A	7	22	34,5	12	15,0	22	4,50	**1073/21**	**XGE10R3/8ZSWDPc3d**
PN 630	12	M20x1,5	G ¼ A	5	19	36,0	12	16,5	22	6,10	**14158/21**	**XGE12R1/4ZSWDPc3d**
	12	M20x1,5	G ⅜ A	8	22	36,5	12	17,0	22	6,20	**1074/21**	**XGE12R3/8ZSWDPc3d**
	12	M20x1,5	G ½ A	8	27	39,0	14	17,5	27	9,90	**8058/21**	**XGE12R1/2ZSWDPc3d**
	16	M24x1,5	G ⅜ A	8	22	38,5	12	18,0	27	8,30	**17700/21**	**XGE16R3/8ZSWDPc3d**
	16	M24x1,5	G ½ A	12	27	41,0	14	18,5	27	9,10	**1076/21**	**XGE16R1/2ZSWDPc3d**
PN 420	16	M24x1,5	G ¾ A	12	32	45,0	16	20,5	27	15,20	**8124/21**	**XGE16R3/4ZSWDPc3d**
	20	M30x2	G ½ A	12	27	45,0	14	20,5	32	14,20	**8426/21**	**XGE20R1/2ZSWDPc3d**
	20	M30x2	G ¾ A	16	32	47,0	16	20,5	32	14,90	**1077/21**	**XGE20R3/4ZSWDPc3d**
	20	M30x2	G 1 A	16	40	51,0	18	22,5	32	16,50	**17671/21**	**XGE20R1ZSWDPc3d**
	25	M36x2	G ½ A	12	27	59,0	14	23,0	41	22,80	**9867/21**	**XGE25R1/2ZSWDPc3d**
	25	M36x2	G ¾ A	16	32	51,0	16	23,0	41	25,50	**8455/21**	**XGE25R3/4ZSWDPc3d**
	25	M36x2	G 1 A	20	40	53,0	18	23,0	41	26,60	**1078/21**	**XGE25R1ZSWDPc3d**
	25	M36x2	G 1¼ A	20	50	55,0	20	23,0	50	41,10	**8656/21**	**XGE25R1¼ZSWDPc3d**
PN 315	25	M36x2	G 1½ A	20	55	60,0	22	26,0	55	54,90	**8427/21**	**XGE25R1½ZSWDPc3d**
PN 420	30	M42x2	G 1 A	20	40	55,0	18	23,5	46	36,40	**17530/21**	**XGE30R1ZSWDPc3d**
	30	M42x2	G 1¼ A	25	50	57,0	20	23,5	50	41,80	**1079/21**	**XGE30R1¼ZSWDPc3d**
PN 315	30	M42x2	G 1½ A	25	55	62,0	22	26,5	55	53,00	**8428/21**	**XGE30R1½ZSWDPc3d**
PN 420	38	M52x2	G 1¼ A	25	50	52,0	20	26,0	55	57,50	**15035/21**	**XGE38R1¼ZSWDPc3d**
	38	M52x2	G 1½ A	32	55	64,0	22	26,0	55	56,30	**1080/21**	**XGE38R1½ZSWDPc3d**

Serienmäßig mit Weichdichtung aus NBR / Auf Wunsch mit FKM lieferbar
Supplied with fitted NBR-sealing / FKM on request